SPECIAL ULTRARAPID FUSES TO POWER SEMICONDUCTOR CONVERTERS PROTECTION

T.Pleşca, P.Leonte, E.Furnică
"Gh. Asachi" Technical University
Iaşi – Romania

Abstract: The paper refers to ultra-rapid fuse cartridges meant to protect both power semiconductor converters and its power semiconductor devices against overloads and short-circuit fault conditions.

I. GENERAL CONSIDERATIONS

The nowadays ultra-rapid fuses to power semiconductor devices have the next drawbacks [1,5]:
- an inadequate overload protection;
- the time-current characteristic, t(I), is not adjustable;
- it doesn't exist the possibility to adapt the protection characteristic to thermal characteristic of protected device;
- the short-circuit current limiting effect is uncontrollable;
- in direct current they can't work to reverse current;
- they are not sensitive to power line sense;
- the changing of wasted fuse cartridges is exclusively only manual;
- they can't be a part of a flexible protection system with microprocessor or microcontroller.

This paper proposes a solution to remove the above drawbacks and this solution is in the middle of our researches, a laboratory stage for the time being.

II. SPECIAL ULTRARAPID FUSE TO POWER SEMICONDUCTORS AND POWER SEMICONDUCTOR CONVERTERS

To eliminate the mentioned above drawbacks it set up the commanded fusing principle of fuse cartridges, accompanying by an example what can be materialized from different means.

Further on, it presents a special ultra-rapid fuse what contains a current transformer with its toroidal core m with rectangular section, Fig.1, the primary being concomitantly a part of secondary. The branched out current I_1 from total current I, flows through one single turn, $N_1 = 1$, of primary P.

The short-circuited secondary S, with $N_2 = 1$, has the a-b section in common with primary P. The secondary S' is galvanic isolated by primary P and secondary S and it has the turns $N' > 1$.

If it supposes initially the situation without core m, the currents will distribute depending on branch impedances, resulting equal currents, $I_1 = I_2$, if the

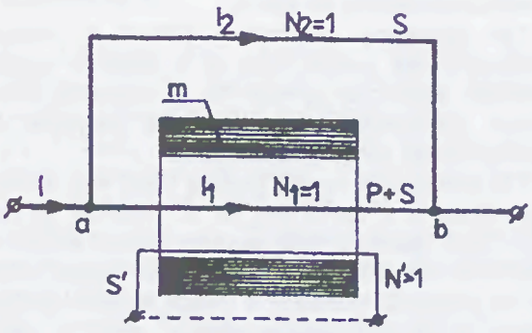

Fig.1 Special current transformer

branch impedances are theoretically equal, actually near values.

Using the core m, it complies with the magnetomotive force law: $N_1 I_1' = N_1 I_0 + N_2 I_2'$, with $N_1 = N_2$ and $I_0 \cong 0$ (magnetization current), leads to $I_1' = I_2'$. In accordance with effects superposition principle, refering to current senses, it results that total current I will flow through branch S and the current will be theoretically zero, actually only magnetization current, I_0, through branch a-b.

If the second secondary S' is short-circuited, the currents become equal on both branches or near values. This current transformer feature is used to special ultra-rapid fuses.

Let consider that ultra-rapid fuse SF meant to protect power semiconductors and their devices, Fig.2, will be made up of two identical fuse cartridges, F_1 and F_2, placed on two parallel branches 1 and 2, with their impedances actually equal in normal operating conditions, so that currents I_1 and I_2 will be also equally.

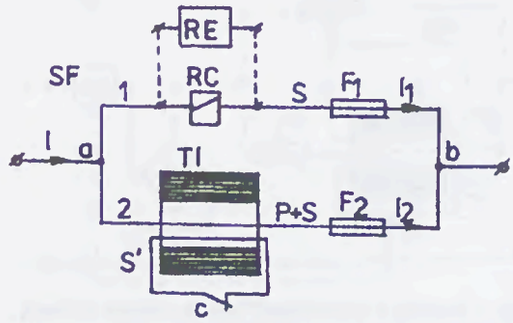

Fig.2 Special ultra-rapid fuse with adjustable time-current characteristic

One of branch, 2, has a current protection transformer with itself primary as conducting wire 2 and secondary S' (traced with one single turn, by simplicity) is short-circuited. The secondary S' can be short-circuited using a current relay RC or an electronic relay RE which turns off its normally closed contact c.

The opening of contact c introduces an inductance because of current transformer TI on branch 2, changing the current repartions. So, the main current which flows through branch 1, provides for working of fuse F_1 followed successively by fuse F_2.

The adjustment possibilities offered by current transformer and current relay or a sensitive current electronic device can provide for an adjustable time-current characteristic and it can be adaptable to protected object thermal characteristic.

The short-circuit current limiting effect will become controlabled if it anticipates the arc ignition. In this case, Fig.3, moreover that previous electric circuit, it introduces a sensitive element to derived current, dI/dt and an additional secondary S'' which supplies through switch k an arc ignition device such: a local miniexplosion; an auxiliary arc etc.

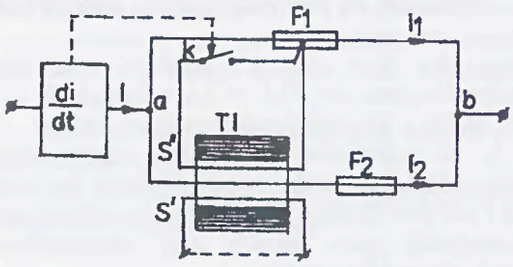

Fig.3 Special ultra-rapid fuse with controlled current limiting effect

So, it starts the anticipated working of fuse and the manifestation of short-circuit current limiting effect when its coming out is clearly.

In the case of power rectifier, Fig.4, when the fuse is on alternative current side, then it introduces a sensitive element to current sense, ES, which commands the

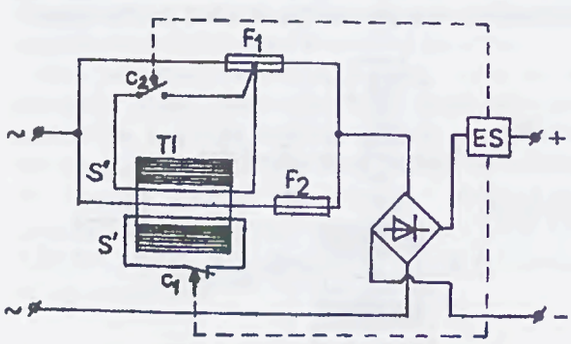

Fig.4 Sensitive ulyra-rapid fuse to reverse current (monophase rectifier bridge variant)

fusing through: turn-off normally closed contact C_1 from secondary S' of current transformer TI; turn-on normally open contact C_2 from secondary S'' which leads to arc ignition or combined methods.

At three-phase rectifier bridges the sensitive element ES will simultaneously command three fuses.

The working to power line sense changing, in alternative current, can be done using a power line directional element for fusing command.

It traced, experimentally, the time-current characteristic for the new type ultra-rapid fuse with rated current, I_n = 200 A, Fig.5. It used the electric circuit from Fig.2 with the next elements:

- F_1, F_2 – two fuse cartridges with rated current by 100 A;
- RC – current relay with its own tripping time, t_t = 16 ms;
- TI – protection current transformer with its transformer ratio by 150/5.

It can notice, Fig.5, that new time-current characteristic consists of two characteristic parts: curve 1 to overload ranges and curve 2 to short-circuit ranges. Also, there is a better protection in the range of overloads, curve 1, Fig.5.

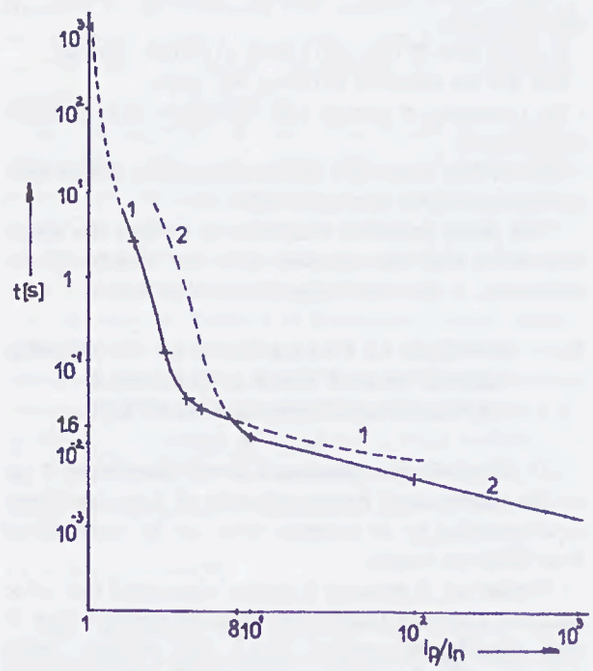

Fig.5 Time-current characteristics

If the commanded fusing spreads to resettable fuses (metal-liquid fuses) then it can implement the above principles to these kind of fuses. The fuses with commanded fusing from an overcurrent protection systems could benefit by microelectronic world services like microprocessor, microcontroller etc.

So, it comes true the modelling of protection characteristic fuses which can have the shape of any overcurrent protection electrical apparatus. Using the

commanded fusing, the fuses can work depending on any established parameter into a system when it is necessary. Also, there is a better selectivity.

The new type fuses offer more safety conditions about power semiconductor and converter protections when it is known the admissible maximum limit of stresses.

This paper showed only an application variant of commanded fusing in the case of ultra-rapid fuses. In the research stage there is other set up variants to offer an optimal solution for established conditions [2,3,4].

III. CONCLUSIONS

It results the following conclusions from examination of proposed solutions to achieve special ultra-rapid fuses for power semiconductor protection:

- ultra-rapid fuses for power semiconductor protection can be set up with commanded fusing;
- the commanded fusing increases the adapting capability of ultra-rapid fuses to modern protection requests;
- the commanded fusing spreads the protection possibilities from overload currents to short-circuit currents;
- at the new type fuses, the protection can be sensitive to direct current sense or power line sense in alternative current, at derived currents and any supervised parameter if that device is compatible with command block to use;
- electricity supply systems allow to use ultra-rapid fuses with commanded fusing because of its adjustable time-current characteristic, commanded current limiting effect, time-current characteristic modelling possibility.

REFERENCES

[1] A.Wright, P.G. Newbery, "Electric Fuses", Published by The Institution of Electrical Engineers, London, United Kingdom, 2nd Edition, 1995.

[2] T.Pleşca, P.Leonte, "Siguranţă fuzibilă specială pentru redresoarele de putere", Cerere brevet invenţie, Dosar OSIM nr. 98-01739, 1998.

[3] T.Pleşca, P.Leonte, "Element de înlocuire specializat pentru siguranţe ultrarapide", Cerere brevet invenţie, Dosar OSIM nr. 98-01740, 1998.

[4] P.Leonte, T.Pleşca, "Siguranţă ultrarapidă pentru protecţia semiconductoarelor de putere", Cerere brevet invenţie, Dosar OSIM nr. 98-01131, 1998.

[5] SIBA – FuseLinks for power semiconductor protection, URA-06/98.