DISTRIBUTION OF HIGH-FREQUENCY CURRENTS THROUGH THE ELEMENTS OF A FUSE

S. DUONG*, C. SCHAEFFER*, R. DESHAYES**, J.L. GELET**

* Laboratoire d'Electrotechnique de Grenoble (CNRS URA 355)
BP 46 - 38402 SAINT MARTIN D'HERES Cedex - FRANCE
Tél : 76 82 62 85
Fax : 76 82 63 00

** Société FERRAZ
Rue Vaucanson - 69720 SAINT BONNET DE MURE - FRANCE
Tél : 72 22 66 39
Fax : 72 22 66 12

Abstract

Nowadays, thanks to IGBT, power electronics applications work with very high frequency. Considering the power switched by IGBT, protection against explosion of the case is necessary. Fuses designed for the protection of semiconductors can be used [1]. However, fuse's behaviour is affected by high frequency and the current rating of fuses must be reduced with increasing frequency.
Furthermore, the reduction of wiring inductance is of great importance in modern power applications. That's why the planar Bus-Bar technology is often used [2]. It consists in a stacking of close copper sheets separated by insulation. The distribution of the current can be affected by the close current carrying conductor and its influence must be investigated. Our studies will be made for different kinds of connections between fuse and copper sheets.
To obtain the distribution of current through the elements of the fuse, the Flux2D computer program based on the finite element method is used. As a result, current distribution can be obtained as a function of frequency and the distance between fuse and current carrying conductor. So, derating of the fuse can be determined. Those characteristics are very important for designers to ensure the fuse will not melt prematurely at high frequency.

1 Electromagnetic effects

From electromagnetic laws, it can be established that the distribution of high frequency alternating current through parallel conductors is controlled by two phenomena : skin effect and proximity effects.

1.1 Skin effect

Let us consider an alternating current flowing in an isolated conductor. The flux in the conductor is continually changing because of the alternating current. So, electromagnetic field's are induced thereby eddy current are generated. The result is that the current flows only in a thin skin of thickness of the order of δ (skin depth) [3] :

$$\delta = \sqrt{\frac{2}{\sigma\omega\mu_o}} \qquad (1)$$

where σ electrical conductivity ($\Omega^{-1}.m^{-1}$)
$\omega = 2\pi f$ with f : frequency (Hz)
μ_o magnetic permeability of vacuum ($4\pi.10^{-7}$ SI)

As a result, this phenomenon is called skin effect. For high frequency, the current is increasingly confined to the surface of the conductor.

1.2 Proximity effects

Let us consider an alternating current divided among a group of close parallel conductor. The magnetic flux through one conductor is due to its own current (self inductance) and the current in others conductors (mutual inductance). In other words, each conductor generate eddy current in others by mutual effect [3]. As a result, the sharing of the total current between conductors is generally unequal.
As this phenomenon is dependant on the distance between conductors, it is called direct proximity effect.
Furthermore, if a current carrying conductor is brought near the parallel conductors, the distribution of the current can be affected. This phenomenon is called inverse proximity effect since opposite currents flow in current carrying conductor and the group of parallel conductors.

2 Test on 3 parallel sheets

Current distribution among parallel conductors is determined by solving electromagnetic laws. This theoretical approach generally leads to equations that requires computing. That is why the Flux2D computer program [4] will be used to obtain the distribution of current through parallel conductors. Flux2D is an electromagnetic software based on the finite element method. As it is a two dimensional software, all conductors are assumed to be infinitely long.

2.1 Influence of skin effect

Skin effect is well known : when an alternating current flows a conductor, current density is higher at the edge than at the centre. Figure 1 represents current density in a silver sheet for an alternating current having an amplitude of I_n and a frequency of 5 kHz. At 5 kHz, a skin depth of 0,95 mm is calculated from (1). Thus, skin effect is negligible in the depth of the sheet. However, simulation shows that skin effect is very important in the width.

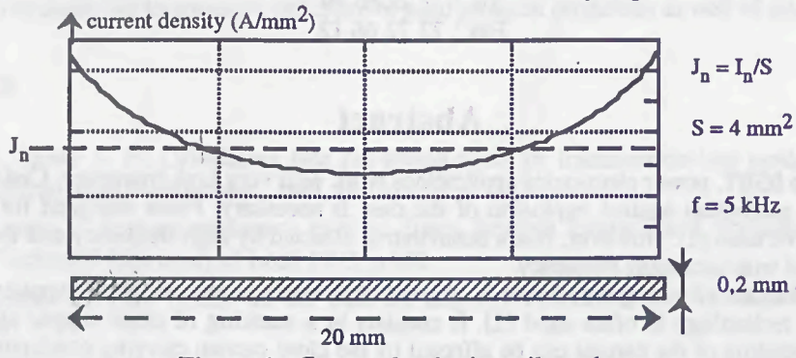

Figure 1 : Current density in a silver sheet

2.2 Influence of direct proximity effect

To become aware of the direct proximity effect, the distribution of an alternating current through 3 parallel silver sheets will be investigated (fig. 2).

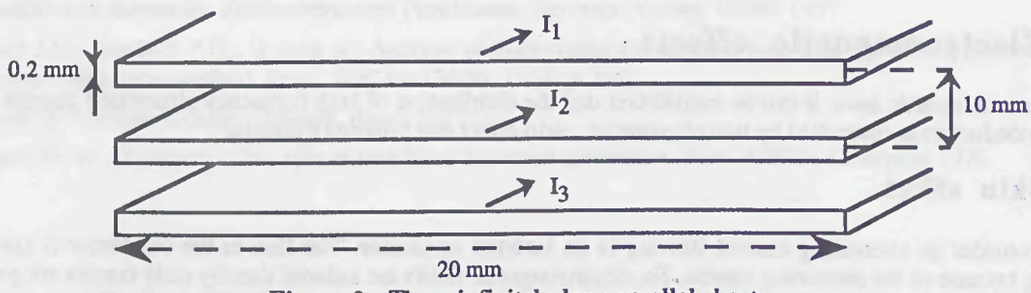

Figure 2 : Three infinitely-long parallel sheets

The group of conductors carry a total alternating current having an amplitude of 450 A. Due to the symmetry of the structure, currents flowing in conductors 1 and 3 are equal. Figure 3 represents the module of the current carried by each conductor as a function of frequency.

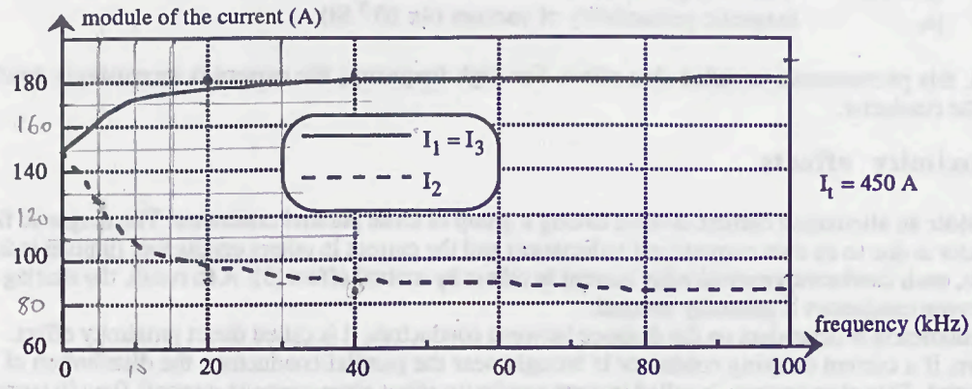

Figure 3 : Distribution of the current as a function of frequency

At very low frequencies, the current in each conductor is equal to 150 A, but at high frequencies, sharing is very uneven. As conductor 2 is at the centre, the flux linkage is the greatest. As a result, high eddy current is induced and conductor 2 flows a low current. Conductors 1 and 3 carry a higher current than conductor 2.
Moreover, fig. 3 shows that for frequencies above 20 kHz, the distribution of the current among conductors remains roughly the same. The explanation given is that at low frequencies, the current distribution is controlled by the resistances of the conductors whereas at high frequencies, current distribution is controlled only by inductances (resistances become negligible).
However, if current distribution remains constant, current density in a conductor is still increasing with frequency.
To obtain an homogeneous distribution of the current, mutual inductances have to be equal. This is done for a 3 axis symmetry geometry (fig. 4).

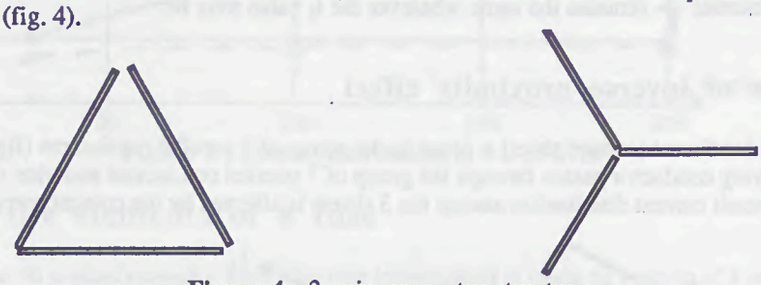

Figure 4 : 3 axis symmetry structure

Then, with structures described in fig. 4, the sharing of the total current between conductors is equal for all frequencies but current density in one conductor is still affected by frequency.
To obtain a constant current density in one conductor, a cylindrical structure is required. For instance, with structure shown on fig. 5, current density in each conductor remains the same for a large range of frequency.

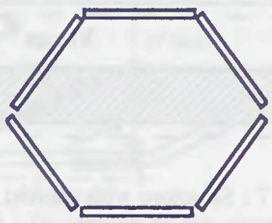

Figure 5 : Cylindrical structure for constant current density

Direct proximity effect is independent of the total alternating current carrying amplitude. The group of the 3 parallel conductors can be modelled electrically by the R, L equivalent circuit coupled with mutual coefficients (fig. 6).

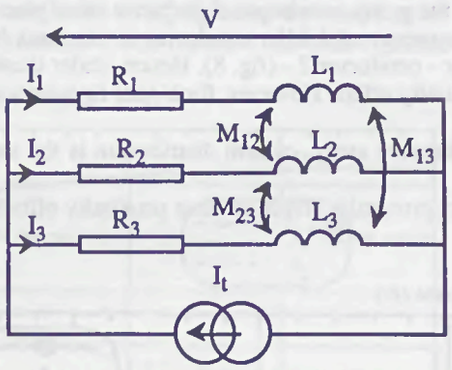

Figure 6 : R, L equivalent circuit of the 3 parallel conductors shown in fig. 3

Using matrix notations, the relationship between voltages and currents is given by :

$$\begin{bmatrix} \overline{V}_1 \\ \overline{V}_2 \\ \overline{V}_3 \end{bmatrix} = \begin{bmatrix} R_1 + jL_1\omega & M_{12} & M_{13} \\ M_{12} & R_2 + jL_2\omega & M_{23} \\ M_{13} & M_{23} & R_3 + jL_3\omega \end{bmatrix} \begin{bmatrix} \overline{I}_1 \\ \overline{I}_2 \\ \overline{I}_3 \end{bmatrix} \quad \text{or} \quad [\overline{V}] = [\overline{Z}]\,[\overline{I}]$$

Hence, $[\overline{I}] = [\overline{Y}][\overline{V}]$ where $[\overline{Y}] = [\overline{Z}]^{-1}$

Assuming that an equipotential exists at each side of conductors, voltages $\overline{V}_i$ are equal : $\overline{V}_1 = \overline{V}_2 = \overline{V}_3$

Furthermore, current through each conductor verify the relation : $\bar{I}_1 + \bar{I}_2 + \bar{I}_3 = \bar{I}_t$

So, : $$[\bar{I}] = [\bar{Y}]\,[\bar{V}] = [\bar{Y}]\begin{bmatrix}1\\1\\1\end{bmatrix}\frac{\bar{I}_t}{\sum_i\sum_j \bar{Y}_{ij}}$$

It can be concluded that each current is proportional to the total current. As a result, the ratio current in one conductor to total current $\frac{\bar{I}_i}{\bar{I}_t}$ remains the same whatever the I_t value may be.

2.3 Influence of inverse proximity effect

A current carrying conductor (copper sheet) is close to the group of 3 parallel conductors (fig. 7). The flux generated by the current carrying conductor passes through the group of 3 parallel conductors and vice versa, then eddy currents are induced. As a result current distribution among the 3 sheets is affected by the current carrying conductor.

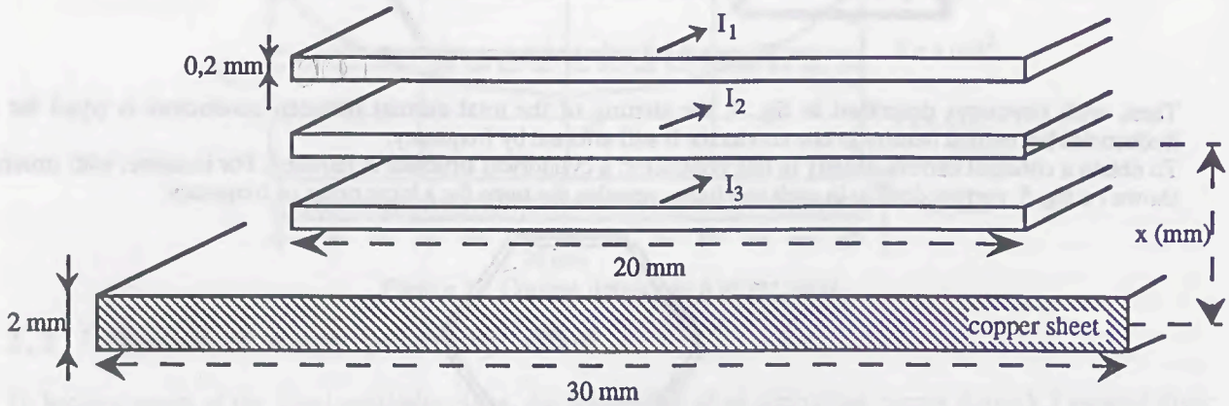

Figure 7 : Structure with current carrying sheet

To test if inverse proximity effect have an influence on current distribution among the parallel conductors, simulations are repeated for various spacings x and frequencies. Figs. 8 and 9 show the current carried by each conductor for a total current having an amplitude of 450 A and a frequency of 1 and 10 kHz.
At high frequencies, current in the conductor nearest to the return conductor (conductor 3) is the highest. When the return conductor is very close to the group, maximum disturbance takes place.
For a spacing of 50 mm and frequency of 1 kHz, conductor 1 - furthest from the return conductor - carries less current than the centre conductor - conductor 2 - (fig. 8). Hence, under these conditions, inverse proximity effect is more significant than direct proximity effect. However, for higher frequencies and spacings x, direct proximity effect is prominent.
For a return conductor a long distance away, current distribution is the same as fig. 3 : inverse proximity effect becomes negligible.
It can be shown that as for direct proximity effect, inverse proximity effect is independent of the amplitude of the current.

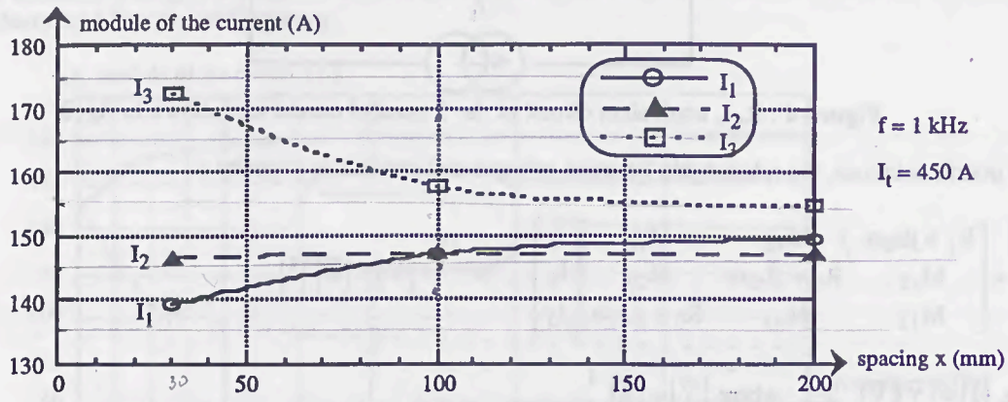

Figure 8 : Current distribution at f = 1 kHz

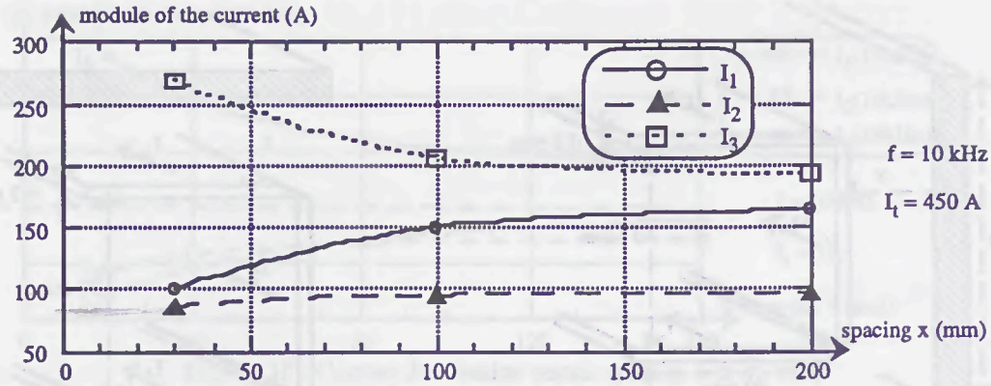

Figure 9 : Current distribution at f = 10 kHz

3. Test with the elements of a fuse

The same tests are made on a semiconductor fuse. The fuse investigated is made of a group of 3 parallel silver sheets arranged as fig. 10.

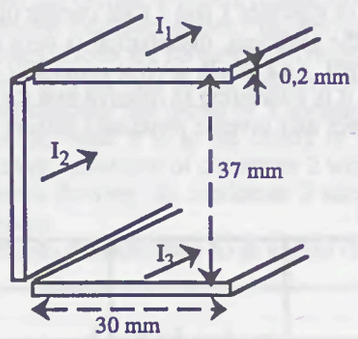

Figure 10 : Dimension of the elements

3.1 Direct proximity effect

Due to the symmetry, conductors 1 and 3 carry the same current. Fig. 11 shows the current distribution among elements for a total current I_t having an amplitude of $3I_n$ (I_n being the rated current in one conductor). Conductor at the centre (conductor 2) carries the lowest current : this is an expected result.

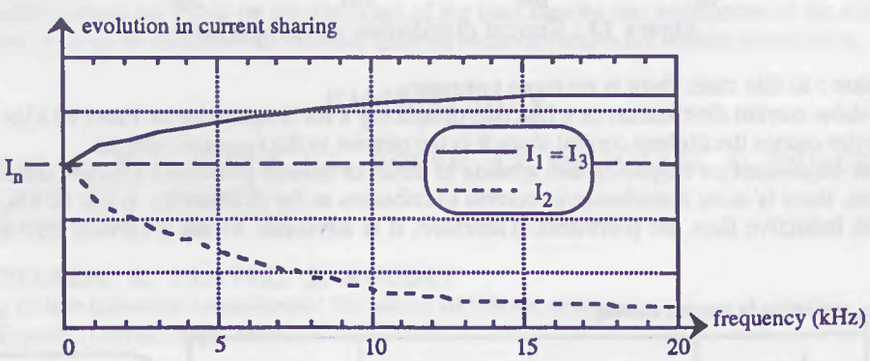

Figure 11 : Current distribution versus frequency

3.2 Inverse proximity effect

Our studies will be made for two positions of return conductors as shown on fig. 12.

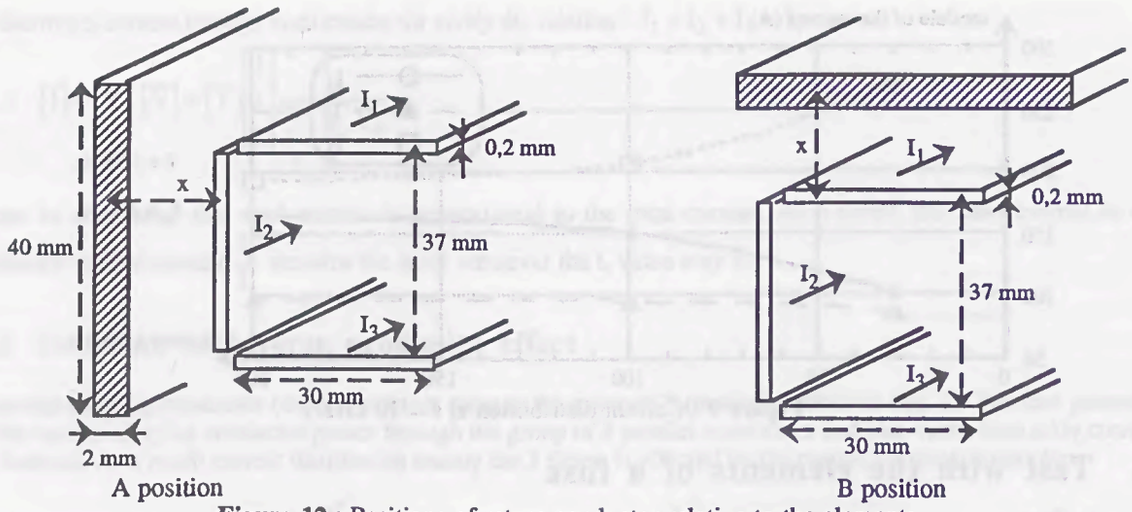

Figure 12 : Positions of return conductor relative to the elements.

* A position : in this case, conductors 1 and 3 carry the same current.
Simulations are made for various values of spacings x and a total current of $3I_n$ (fig. 13).
When the return conductor is close to the elements, distribution is very uneven. Conductor 2, the nearest to the return conductor, carries the highest current. As a result, inverse proximity effect is the most significant.
For a spacing x of the order of 150 mm, it is interesting to observe that the current distribution among the elements is roughly equal. The reason is that direct and inverse proximity effects counterbalance. This special spacing is independent of frequency.

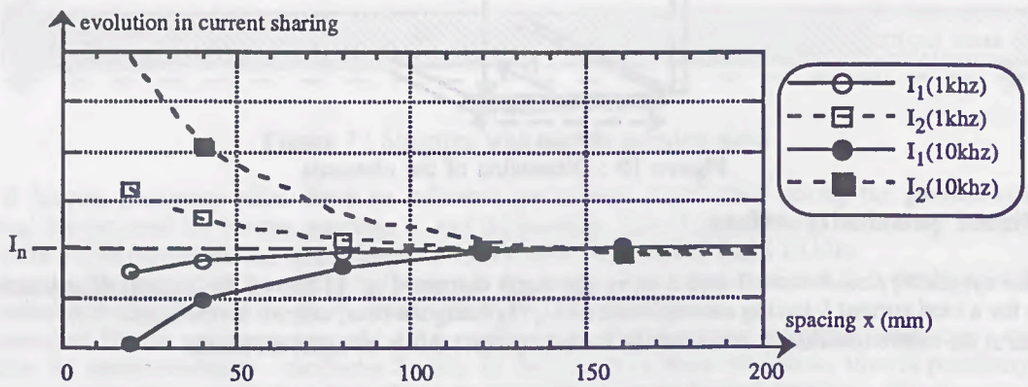

Figure 13 : Current distribution versus spacing x

* B position : in this case, there is no more symmetry.
Figs. 14 and 15 show current distribution as a function of spacing x for frequencies of 1 and 10 kHz.
Conductor 1 always carries the highest current since it is the nearest to the return conductor.
As for A position, dependant on frequency and spacing x, direct or inverse proximity effect is prominent. However, with this structure, there is more disturbance in current distribution as for A structure. It can be also shown that this structure is more inductive than the precedent. Therefore, it is advisable to use a current carrying conductor in position A.

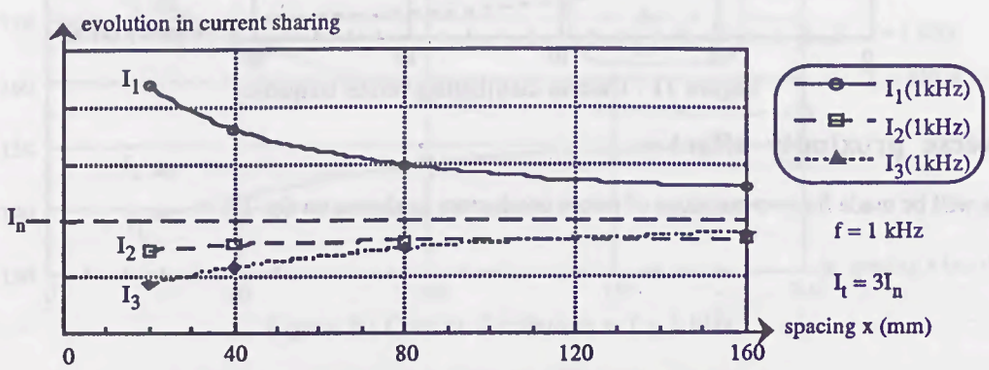

Figure 14 : Current distribution versus spacing x at 1 kHz

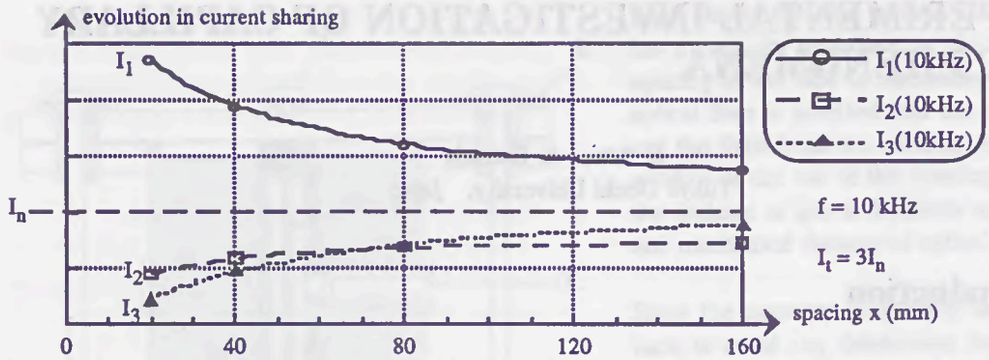

Figure 15 : Current distribution versus spacing x at 10 kHz

4 Thermal effects

As resistances of elements increase with temperature, thermal effects must be taken into consideration. Nevertheless, thermal effects affect current distribution only at low frequencies (until 20 kHz). As mentioned before, for high frequencies, current distribution is independent of resistances values.
If a current in one conductor is higher than the current in others conductors, temperature of this conductor will rise. The result is that resistance of this conductor increases thereby the current flowing will decrease and be diverted through the other conductors. Hence, thermal effects are favourable to obtain homogeneous distribution.
However, the geometry of the fuse plays a great part in the temperature of each element and therefore of the resistances values. As an example, let us consider the group of 3 parallel conductors (fig. 2), conductor 2 at the centre carries the lowest current. However, since it is at the centre of the fuse, its temperature is higher than temperature of conductors 1 and 3. Therefore, resistance of conductor 2 will rise and become higher than resistances of conductors 1 and 3. As a result, current flowing in conductor 2 decreases. In this case, thermal effects are unfavourable for having an equal distribution.
We see that thermal effects must be taken into consideration so as to find the current distribution.

Conclusion

Proximity effects play a great part in current distribution among the elements of a fuse. Some element may carry more than their rated current and so melt or age rapidly. These elements are ruptured thereby fuse operate. That's why current rating of fuses must be reduced when they are used in high frequency applications.
These derating characteristics must be done by taking the return conductor into consideration. It is necessary to study all kinds of connections for the return conductor in order to minimise disturbance in current distribution as well as inductances [5].
Moreover, reduced sections are made on the elements of the fuse thereby the resistances of the elements increase. Then, studies have to be made to determine whether reduced sections disturb the current distribution.

Bibliography

[1] S. DUONG, C. SCHAEFFER, L.L. ROUVE, J.F. DE PALMA, C. MULLERT
Fuses for power IGBT - converters.
IAS/IEEE proc., Denver, sept. 1994.

[2] J.L. SCHANEN, E. CLAVEL, J. ROUDET
Modeling of low inductive connections : the planar BUSBAR structure
IAS/IEEE proc., Denver, sept. 1994.

[3] G. FOURNET
Electromagnetisme à partir des equations locales
Ed. Masson, 1985.

[4] FLUX2D
reference manual, version 7.2, Cedrat-Magsoft corporation, USA.

[5] J. L. SCHANEN
Integration de la Compatibilité Electromagnétique dans la conception de convertisseurs en Electronique de puissance.
Thèse de doctorat INPG Génie Electrique, 30 mars 1992.